Innovation since 1935

PRODUCT TECHNICAL SHEET

Collection :	SULLY	Ref. :	4032.--.57

Batterie de bidet 3 trous avec vidage

3-gats bidetmengkraan met lediging

3-hole bidet mixer with waste

Picture

Product details

Internal mechanism : Ceramic valve 1/4 turn

Technical drawing

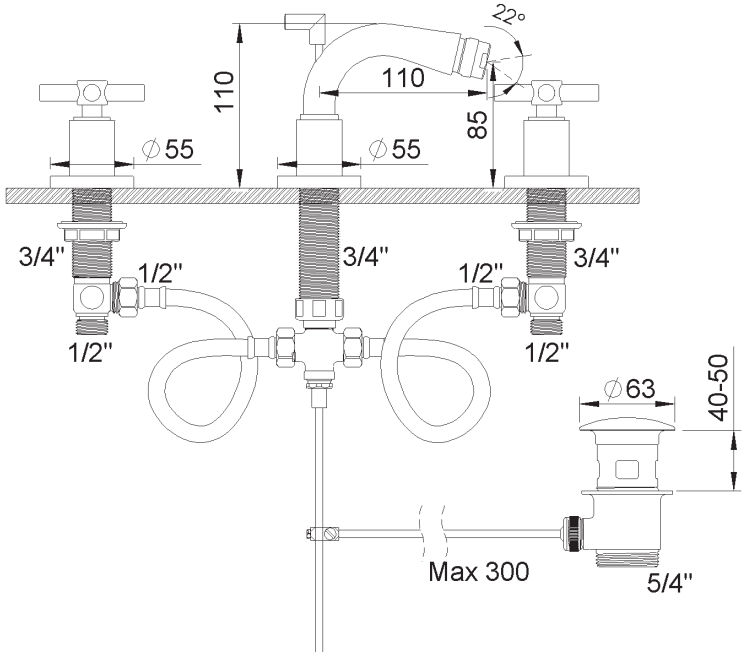

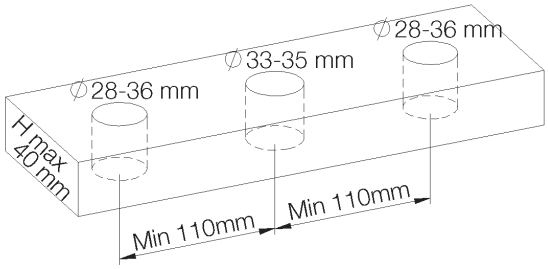

RA0.V01

rvb sa/nv Boulevard Industriel 137 Industrielaan B-1070 Brussels Belgium Tel: +32 2 376 00 30 info@rvb.be www.rvb.be